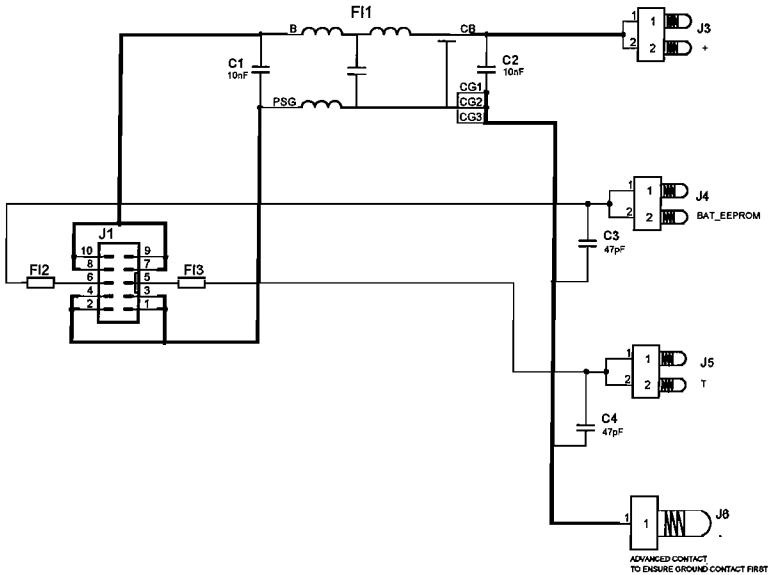

Rev	Date	By	Changes
02	12/11/07	FL2	Added Filter
01	21/02/06	FL2	CREATION

Verif

This document cannot be copied/distributed without AIROX authorisation

File: Schéma carte connexion batterie RB0505 IND02

Material:

Accuracy: ±

Appearance:

Qty:

Treatment:

Scale:

Avalable for:

Description:

BATTERY CONNECTION BOARD

1/1

Device:

RB0505

Part Number

Drawing Number:

4096600 E01 001