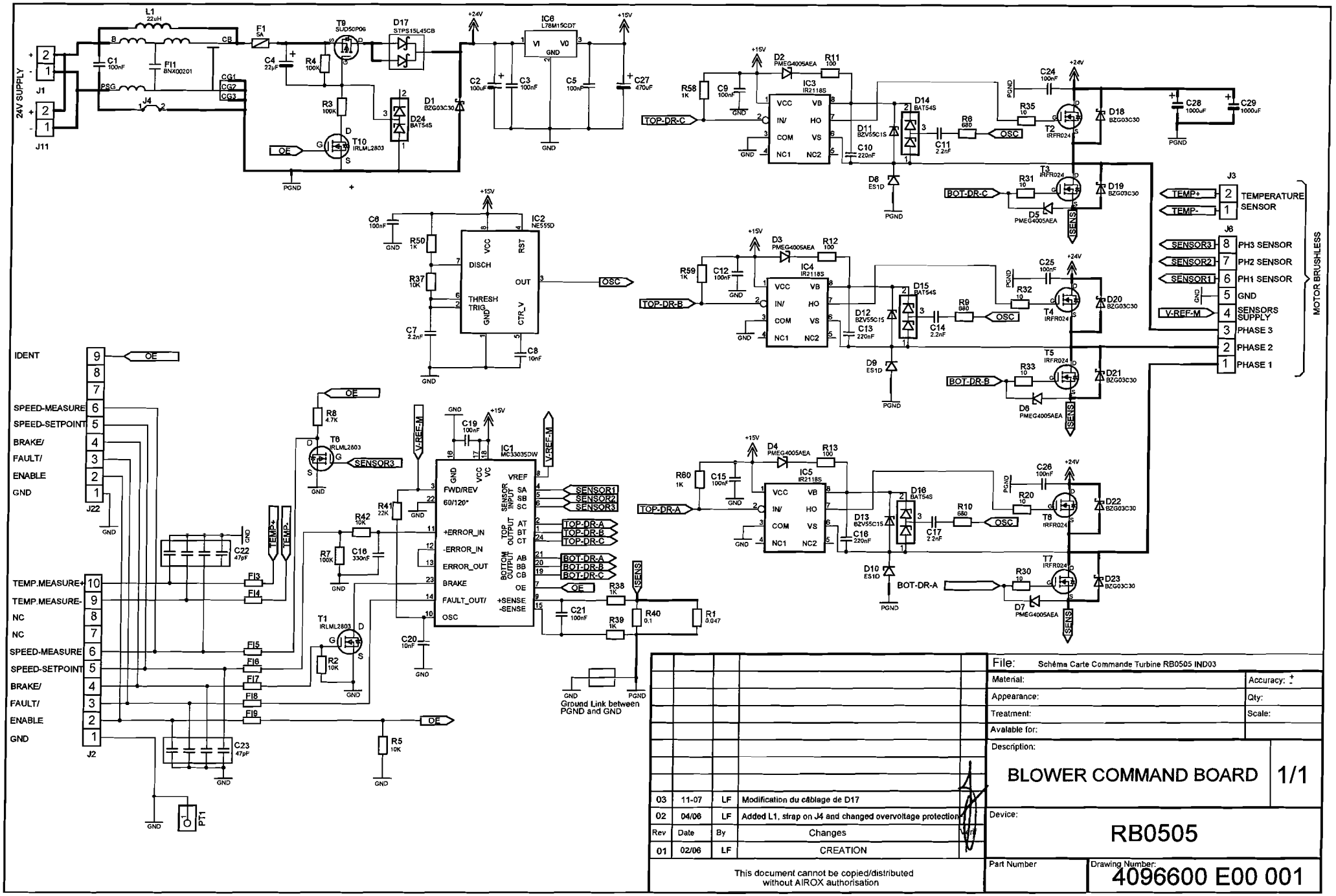

Rev	Date	By	Changes
03	11-07	LF	Modification du câblage de D17
02	04/06	LF	Added L1, strap on J4 and changed overvoltage protection
01	02/06	LF	CREATION

This document cannot be copied/distributed without AIROX authorisation

File: Schéma Carte Commande Turbine RB0505 IND03

Material:

Accuracy: ±

Appearance:

Qty:

Treatment:

Scale:

Avalable for:

Description:

BLOWER COMMAND BOARD

1/1

Device:

RB0505

Part Number

Drawing Number: 4096600 E00 001